REVISION HISTORY OF 020-002149-01			
REV	DESCRIPTION OF CHANGE	BY	REV DATE
01	INITIAL RELEASE	AL	08/25/2023

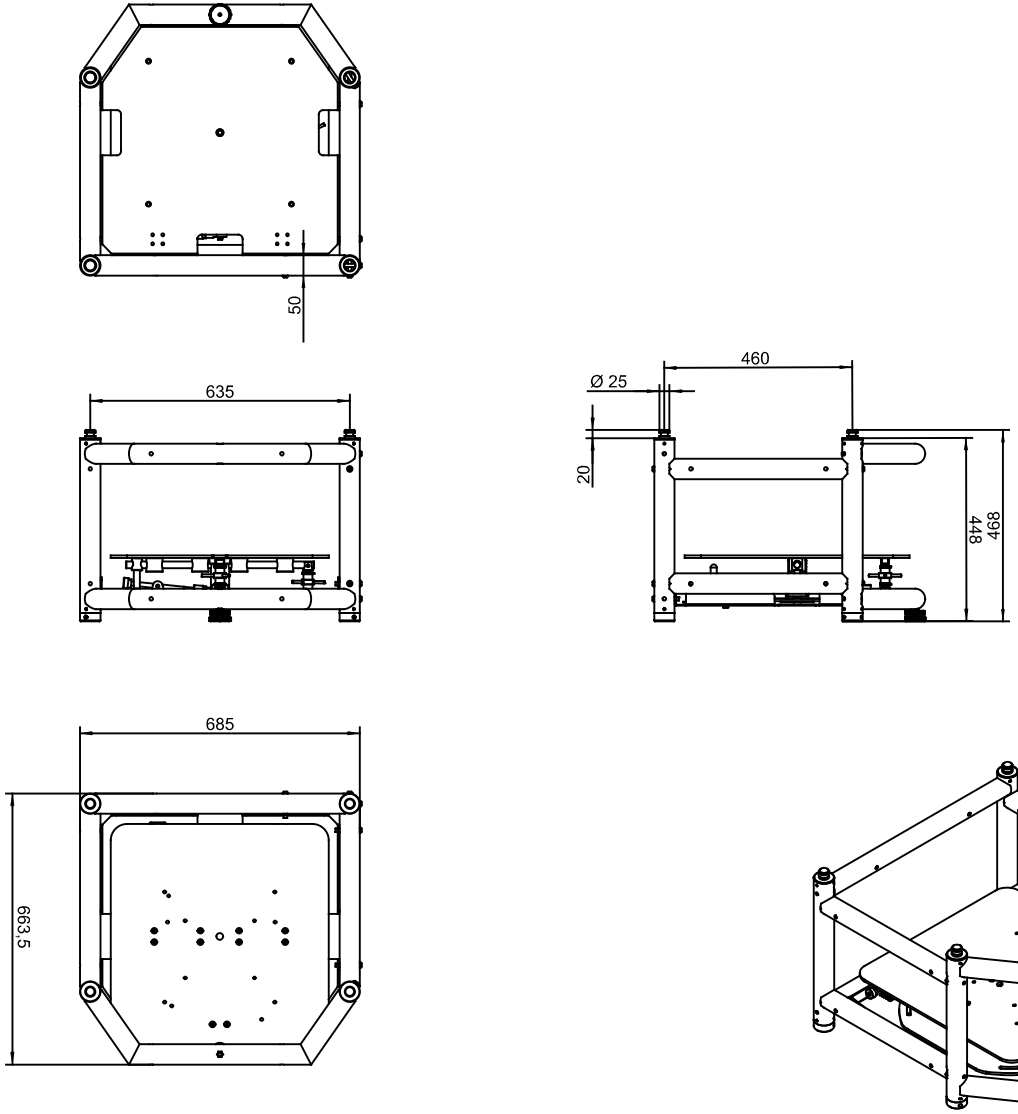

UNITS INCHES ☐ MILLIMETRES ☒
UNLESS OTHERWISE SPECIFIED
INTERPRET DIMENSIONS AND TOLERANCES PER ASME Y14.5M-1994
TOLERANCES APPLY AS SHOWN BELOW

DECIMAL PLACES	INCHES	MILLIMETRES
.XXX	± .063	± 1.6
.XX	± .125	± 3.1
.X	± .250	± 6.3

ANGULAR DIMENSIONS

XX°	±1.0°
XX.X°	±0.5°

DRAWN BY:	ALEX LIU
DRAWN DATE:	08/25/2023
APPROVED BY:	LEWIS
APPROVAL DATE:	08/25/2023

PROPRIETARY
NOT TO BE DISCLOSED OR REPRODUCED IN ANY MANNER WITHOUT THE EXPRESS WRITTEN PERMISSION OF CHRISTIE

THIRD ANGLE PROJECTION

CHRISTIE

CHRISTIE DIGITAL SYSTEMS USA, INC.
CHRISTIE DIGITAL SYSTEMS CANADA, INC.

PART DESCRIPTION: DWG-Line-QwikRig FRM V2

SIZE	PART NUMBER	REVISION
E	020-002149-01	01

SCALE 1:3 | DWG - LBS (- KG) | SHEET 1 OF 1